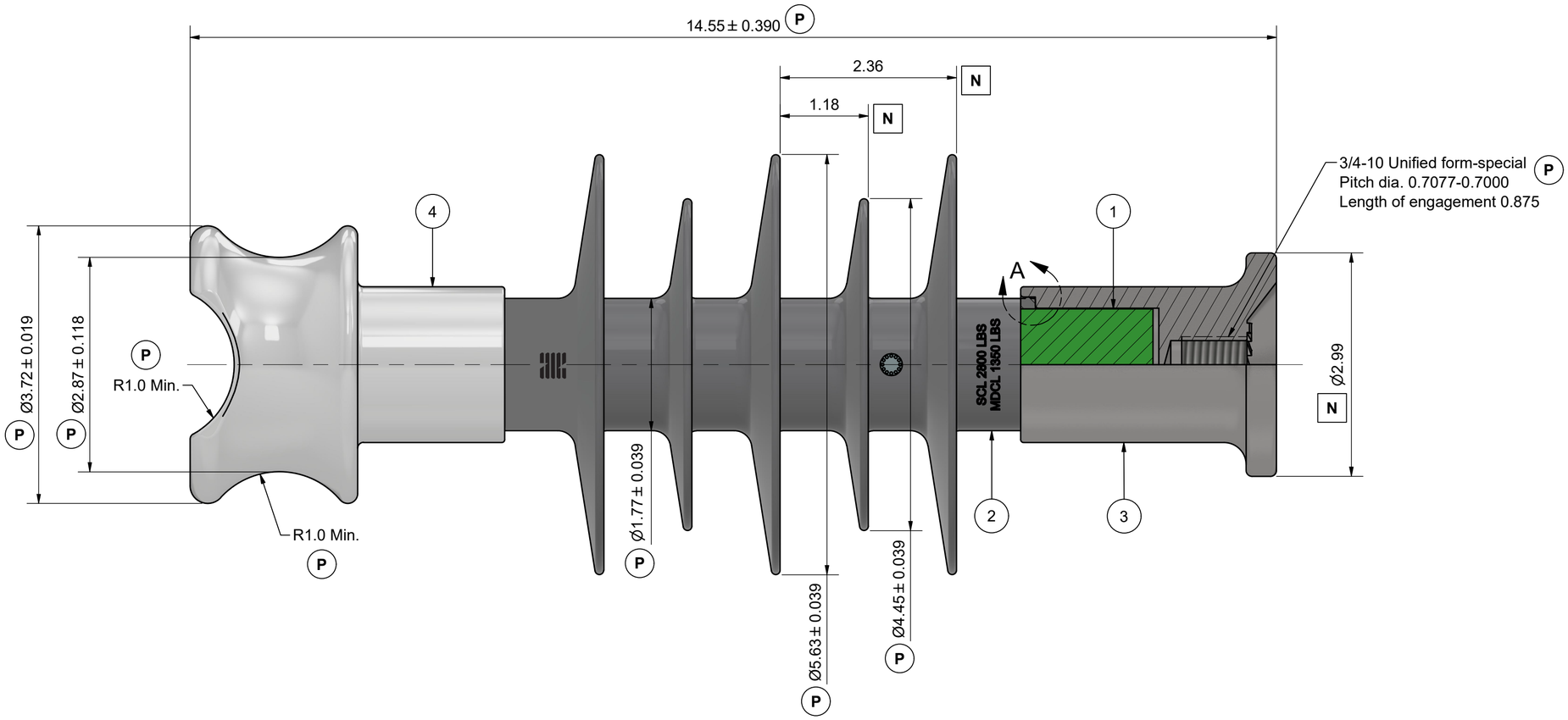

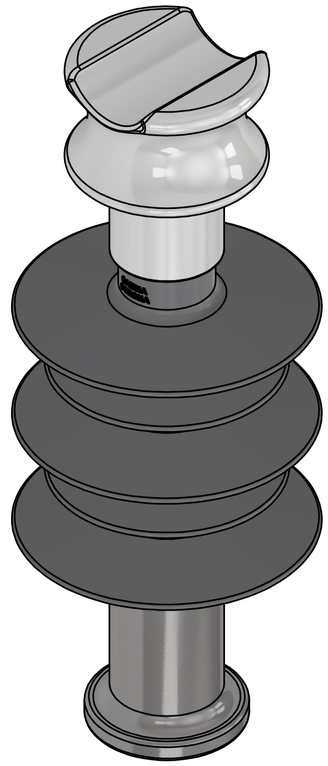

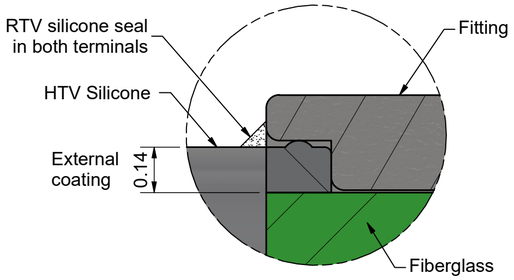

DETAIL A
SCALE 3:1

SILICONE MARKING DETAIL

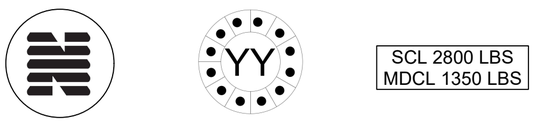

Mark #1
NEWELL

Mark #2
Traceability
(Year-Month)

Mark #3
Mechanical
Parameters

FITTINGS MARKS:

* 28 kV
* GM

ELECTRICAL CHARACTERISTICS:

Voltage: 28 kV

Leakage distance: 21.93 Inch (P)

Arcing distance: 8.74 Inch (P)

Low frequency flashover dry: 100 kV
Low frequency flashover wet: 75 kV
Critical impulse flashover positive 175 kV

MECHANICAL CHARACTERISTICS:

Specified cantilever load (SCL): 12.45 kN (2.800 lbs)
Specified tension load (STL): 8.89 kN (2.000 lbs)
Maximum design cantilever load (MDCL): 6.0 kN (1.350 lbs)
Total weight insulator (Approx.): 3.06 Kg

DIMENSIONS:

Core diameter: Ø1 1/2 Inch
Quantity of sheds: 5 Units

NOTES:

* Fittings according to ANSI C29.18
* Galvanizing of the fittings according to ASTM A153

PARTS LIST

ITEM	QTY	DESCRIPTION	MATERIAL	CODE
1	1	Core	Fiberglass	38,0x253,5-01
2	1	Insulating body	HTV Silicone	APL028KV-01
3	1	Bottom fitting	Forged steel ASTM A29/A29M-1045 hot-dip galvanized	AD03-4BF0-PHC01
4	1	Top fitting tie top neck type "F"	Aluminum ASTM A356-T6	AD0TTFV-PHC03

N Dimension without protocol

P Dimension with protocol

ALL RIGHTS RESERVED DRAWINGS CANNOT BE REPRODUCED IN ANY WAY, FAILURE TO DO SO WILL REQUIRE NEWELL TO TAKE LEGAL ACTION.

Newell
A PGC Company

REF(S): NCLP0282FA
DRAW: Lizeth Bedoya Cossio.
DATE: 2025/05/15
DIN. IN: Inch
REV:
SAP CODE: NCLP0282FA
SC: 1:1.25
APPROVER: David Gonzalez.

CONTENT:
COMPOSITE LINE POST, 28 kV, 51-2F AL.

CUSTOMER: